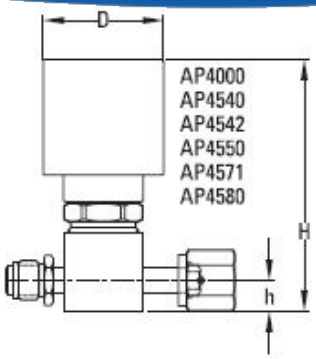

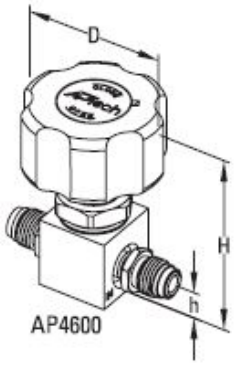

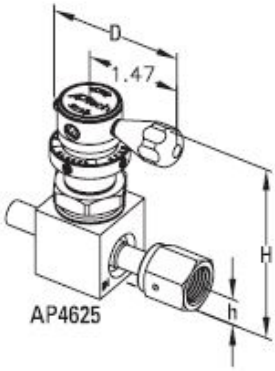

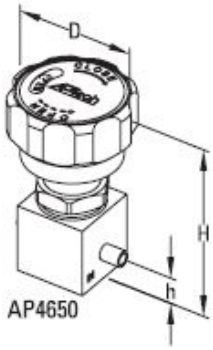

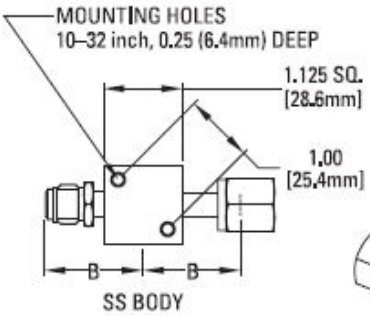

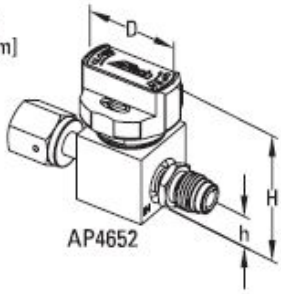

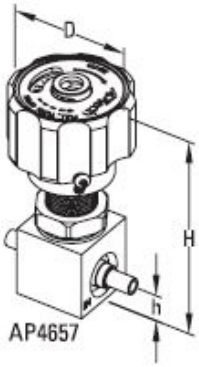

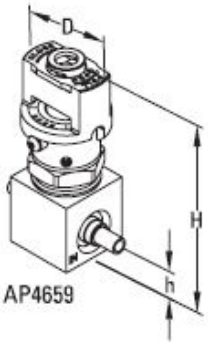

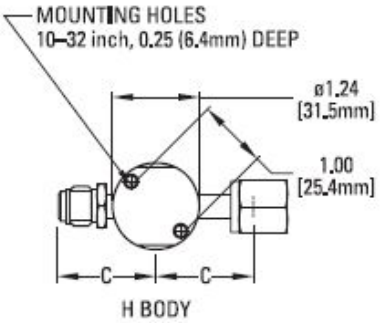

- Metric dimensions are for reference only.
- Height of the valve (H) is an approximate value.
- All specifications subject to change without notice.
- All manual valves are shown in open position.

VALVE	D		H	
	inch	mm	inch	mm
AP4000	ø1.98	50.3	~4.10	104
AP4540	ø1.46	37.1	~3.49	89
AP4542	ø1.57	40.0	~2.24	57
AP4550	ø1.37	34.8	~3.28	83
AP4580	ø1.46	37.1	~3.17	81
AP4571	ø1.72	43.7	~3.63	92
AP4600	ø2.12	53.8	~3.00	76
AP4625	2.04	51.8	~2.94	75
AP4650	ø1.87	47.5	~3.02	77
AP4652	ø1.50	38.0	~2.17	55
AP4657	ø1.87	47.5	~3.60	91
AP4659	ø1.30	33.0	~3.13	80

STAINLESS STEEL BODY				
CONNECTION	B		h	
	inch	mm	inch	mm
FV4, MV4	1.390 ±.010	35.3	0.44	11.2
TW4	1.060 ±.010	26.9	0.44	11.2
FV6, MV6	1.930 ±.010	49.0	0.44	11.2
TW6	1.325 ±.010	33.7	0.44	11.2

Ni-Cr-Mo ALLOY				
CONNECTION	C		h	
	inch	mm	inch	mm
FV4, MV4	1.450 ±.010	36.8	0.44	11.2
TW4	1.080 ±.010	27.4	0.44	11.2
FV6, MV6	1.930 ±.010	49.0	0.44	11.2
TW6	1.325 ±.010	33.7	0.44	11.2

AP404546 SERIES